LONG SEAMS

COURSE	ORIENTATION	ORIENTATION
1(TOP)	15°	195°
2	21°	201°
3	15°	195°

*VERT – TOP TO BOTTOM

Ship loose items:
None

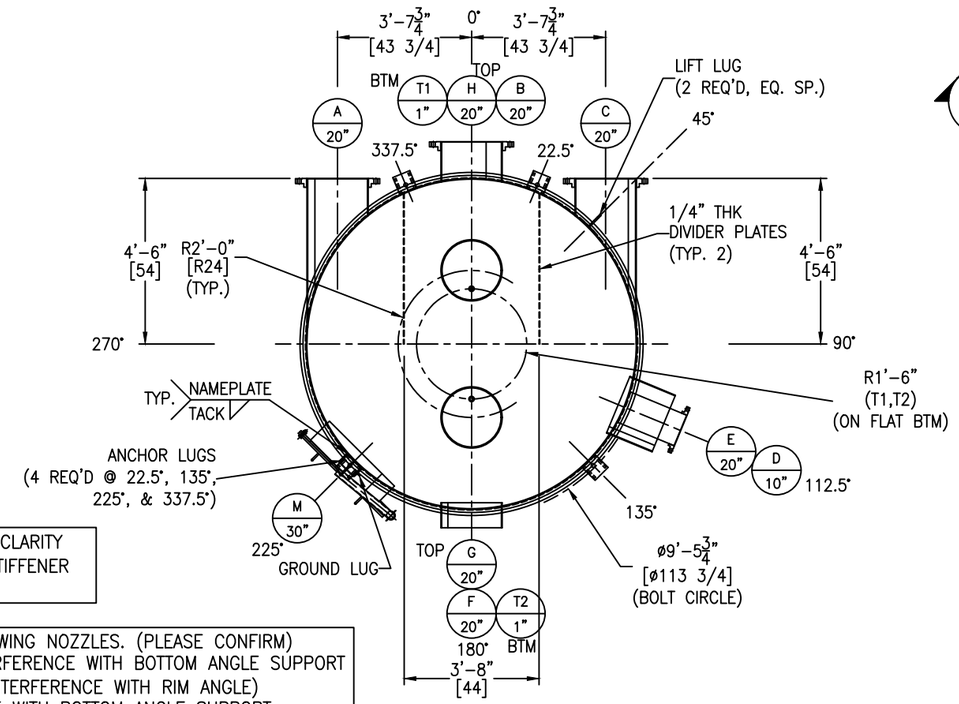

STIFFENERS NOT SHOWN FOR CLARITY PURPOSE. SEE SHT #3 FOR STIFFENER DETAILS

ELEVATION CHANGED FOR FOLLOWING NOZZLES. (PLEASE CONFIRM)
1. A, B & C TO AVOID INTERFERENCE WITH BOTTOM ANGLE SUPPORT
2. E (OVERFLOW TO AVOID INTERFERENCE WITH RIM ANGLE)
3. D TO AVOID INTERFERENCE WITH BOTTOM ANGLE SUPPORT
4. M SINCE TOO LESS SPACE BETWEEN NECK AND CIRC. SEAM

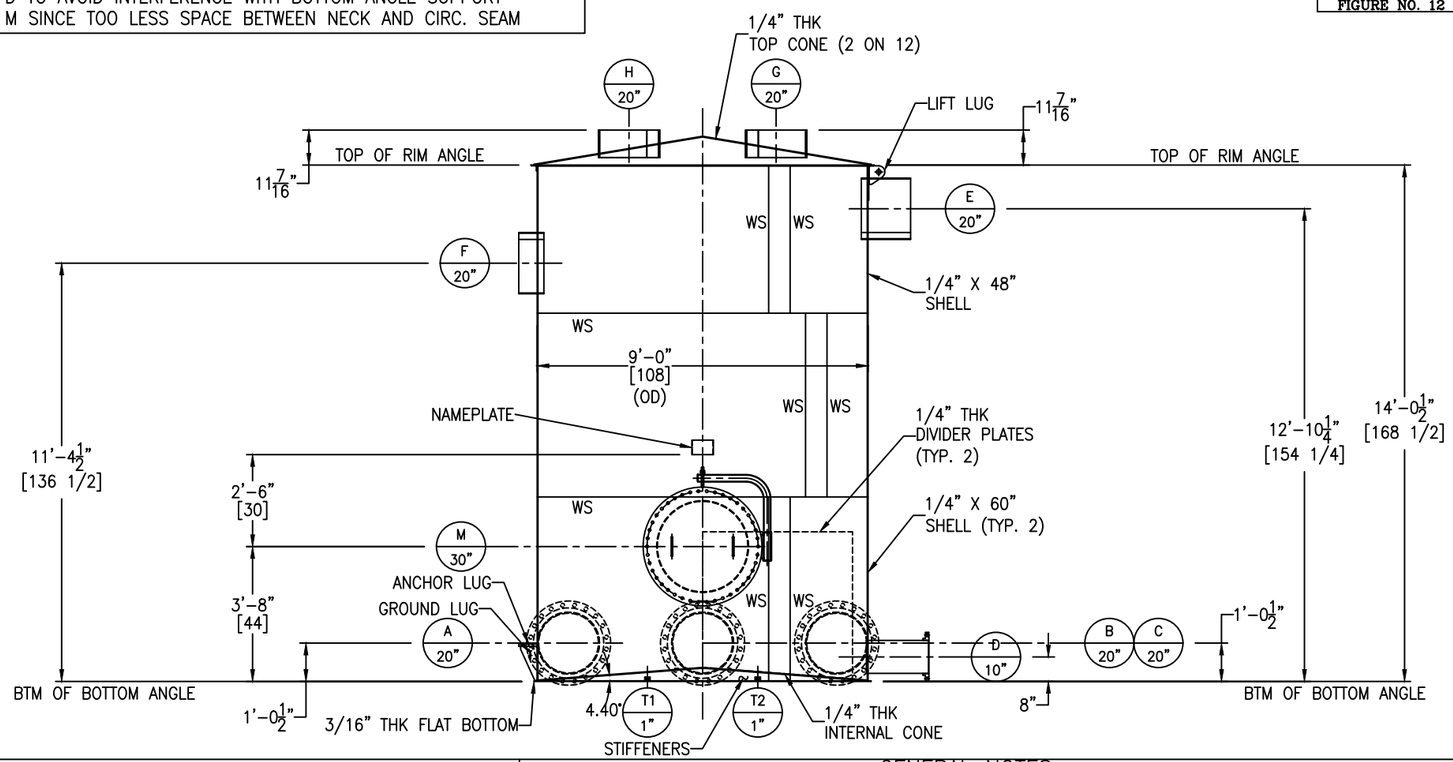

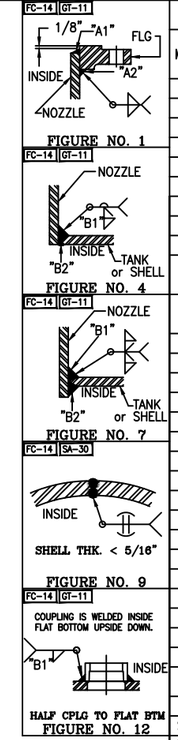

NOZZLE SCHEDULE

MARK	SERVICE	SIZE	RATING	TYPE / STYLE	NECK SCHED.	PROJECTION EXT. (℄)	PROJECTION INT. (MIN.)	WELD FIGURE	REPAD SIZE (WIDTH X THK.)	WELD SIZE "A1"	"A2"	"B1"	"B2"	"C1"	"C2"
M	MANWAY	30"	–	API W/DAVIT	1/4"	6"	1"	7	–	–	–	1/4	1/8	–	–
A	DISCHARGE	20"	150#	RFSO	1/4"	SEE DWG	–	1,4	–	1/4	1/4	1/4	1/8	–	–
B	DISCHARGE	20"	150#	RFSO	1/4"	12"	–	1,4	–	1/4	1/4	1/4	1/8	–	–
C	DISCHARGE	20"	150#	RFSO	1/4"	SEE DWG	–	1,4	–	1/4	1/4	1/4	1/8	–	–
D	DRAIN	10"	150#	RFSO	40S	19 7/8"	–	1,4	–	3/8	3/8	1/4	1/8	–	–
E	OVERFLOW	20"	–	ROLLED PLATE	1/4"	13 7/8"	1"	7	–	–	–	1/4	1/8	–	–
F	INTERCONNECTION	20"	–	ROLLED PLATE	1/4"	6"	1"	7	–	–	–	1/4	1/8	–	–
G	INLET	20"	–	ROLLED PLATE	3/8"	SEE DWG	1"	7	–	–	–	1/4	1/8	–	–
H	INLET	20"	–	ROLLED PLATE	3/8"	SEE DWG	1"	7	–	–	–	1/4	1/8	–	–
T1	TEST CPLG	1"	3000#	HALF THRD CPLG W/ PLUG	–	–	–	12	–	–	–	1/8	–	–	–
T2	TEST CPLG	1"	3000#	HALF THRD CPLG W/ PLUG	–	–	–	12	–	–	–	1/8	–	–	–

MATERIALS OF CONSTRUCTION

	VESSEL
SHELL	SA240-304/304L
TOP CONE/INTERNAL CONE	SA240-304/304L
RIM ANGLE	SA479-304/304L
FLAT BOTTOM	SA240-304/304L
NOZZLE NECKS	SA312-304/304L WLD & SA240-304/304L
NOZZLE FLANGES	SA182F-304/304L
MANWAY NECKS	SA240-304/304L
MANWAY FLANGES	SA240-304/304L
GASKETS	GARLOCK 3000
BOLTS/STUDS	SA193-B7 (ZINC PLATED)
NUTS	SA194-2H (ZINC PLATED)
REPADS	SA240-304/304L
SUPPORTS/HOLD DOWNS	SA240-304/304L
LIFTING LUGS	SA240-304/304L
INTERNAL CONE STIFFENERS	SA240-304/304L
DIVIDER PLATES	SA240-304/304L
GROUND LUG	SA240-304/304L
COUPLINGS/PLUGS	SA182F-304/304L
LADDER	–
TANK CLIPS (LADDER)	–
HANDRAIL	–
HANDRAIL CLIPS	–
PLATFORM	–
PLATFORM CLIPS	–
DIPTUBE SUPPORT	–
JACKET SHELL	–
JACKET HEADS	–
JACKET NOZZLE NECKS	–
JACKET NOZZLE FLANGES	–

DESIGN DATA

	VESSEL
DESIGN AND FAB. CODE	API650 (AS APPLICABLE)
CERT. STAMP REQ'D.	NO
DESIGN PRESSURE	ATM
DESIGN TEMPERATURE	212° F
MIN. DESIGN METAL TEMP.	-20° F @ ATM
OPERATING PRESSURE	–
OPERATING TEMPERATURE	–
JOINT EFFICIENCY HEADS	0.70
JOINT EFFICIENCY SHELL	0.70
CORROSION ALLOWANCE	0"
SPECIFIC GRAVITY	1.07
EARTHQUAKE ZONE	Ss = (0.059) S1 = (0.025)
WIND LOAD	147 MPH
STRESS RELIEF	NOT REQ'D
RADIOGRAPHIC EXAM	NOT REQ'D
DYE PENETRANT EXAM	NOT REQ'D
MAGNETIC PARTICLE EXAM	NOT REQ'D
HYDROSTATIC TEST	NOT REQ'D
PNEUMATIC TEST	2 PSIG
JKT DESIGN AND FAB. CODE	–
JKT CERT. STAMP REQ'D.	–
JKT DESIGN PRESSURE	–
JKT DESIGN TEMPERATURE	–
JKT MIN. DESIGN METAL TEMP.	–
JKT OPERATING PRESSURE	–
JKT OPERATING TEMPERATURE	–
JKT JOINT EFFICIENCY HEADS	–
JKT JOINT EFFICIENCY SHELL	–
JKT HYDRO TEST	–

VESSEL FINISH

INTERIOR WELD TREATMENT:	SAV TANK STANDARD
EXTERIOR WELD TREATMENT:	SAV TANK STANDARD
SAV TANK FINISHING STANDARD:	SEE NOTE 6
INSULATION:	N/A
PAINTING:	N/A

VESSEL CAPACITY AND WEIGHTS

OPERATING CAPACITY	–
FULL CAPACITY	6,700 GAL.
EMPTY SHIPPING WEIGHT	9,400 LBS.
WEIGHT FULL OF WATER	65,500 LBS.
WEIGHT FULL OF PRODUCT	69,500 LBS.

QUALITY CONTROL

ENG. _____ DATE: _____

Q.C. _____ DATE: _____

This drawing is issued for customer approval. please review, make approval changes (if any) in red. check the appropriate box, sign & date.

- ☐ Approval – no changes. Please proceed with fabrication.
- ☐ Approved as noted. Please proceed with fabrication
- ☐ Not approved. Please make changes and resubmit.

Customer signature _____ Date _____

GENERAL NOTES

1.) COVER ALL FLANGES, OPENINGS & MACHINED SURFACES PRIOR TO SHIPMENT UNLESS OTHERWISE NOTED.
2.) BOLT HOLES TO STRADDLE 0° & 180° UNLESS OTHERWISE NOTED.
3.) NOZZLE REPADS TO HAVE (1) ø1/4" TELL-TALE HOLES ON HORIZONTAL CENTER LINE. ALL OTHER REPADS TO HAVE (1) ø1/4" WEEP HOLE AT LOWEST POINT ON PAD.
4.) MANUFACTURING TOLERANCE TO BE IN ACCORDANCE WITH API STANDARD 650 7.5.
5.) ASME MATERIALS TO CONFORM TO THE FOLLOWING: FLANGES – B16.5, FITTINGS – B16.9 & COUPLINGS – B16.11.
6.) PICKLE ALL EXTERIOR WELDS. PASSIVATE INTERIOR & EXTERIOR OF VESSEL.

REVISIONS

REV	D.BY	C.BY	DATE	DESCRIPTION
2				AS BUILT
1	RS	–	3/13/26	CERTIFIED
0	AD	HP	2/26/26	APPROVAL

Savannah Tank & Equipment Corp.
1517 Telfair Road, Savannah, GA 31415
(912) 233-8902

DRAWN BY: AD
CHK'D BY: HP
APPROVED BY: NP
SCALE: 3/8" = 1'-0"

US SUGAR CORPORATION
PRIMARY SCREENED JUICE TANK C
△1 EQUIP. #RJH TNK 100239
CUST. PO #4500440583

DRAWING NO.: 021-26-1 SHT 1 OF 5 REV. SET 1

FC-14

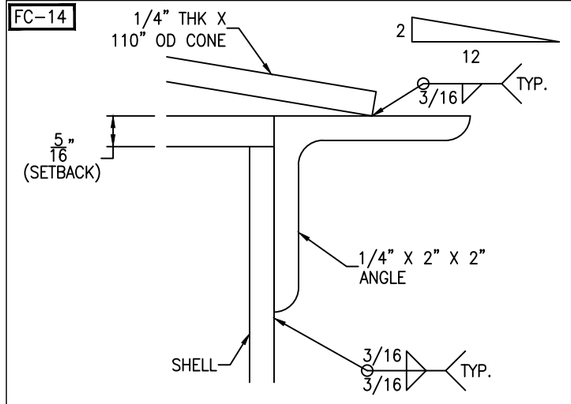

RIM ANGLE DETAIL

SCALE: 1'-0" = 1'-0"

FC-14

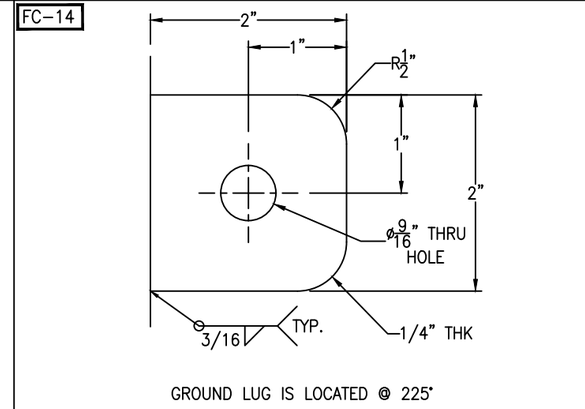

GROUND LUG IS LOCATED @ 225°

GROUND LUG DETAIL

(1 REQ'D) SCALE: 1'-0" = 1'-0"

FC-14

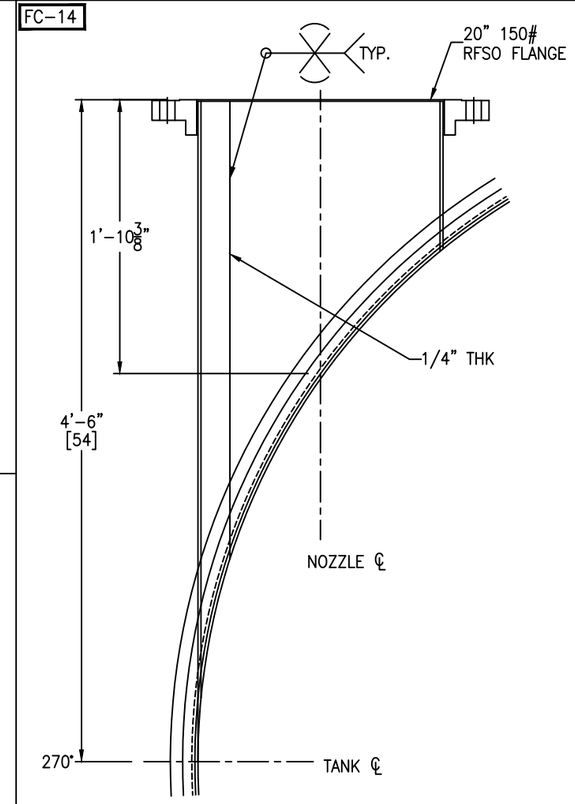

SEE SHT #1 FOR ORIENTATION

NOZZLE A DETAIL

SCALE: 1 1/2" = 1'-0"

FC-14

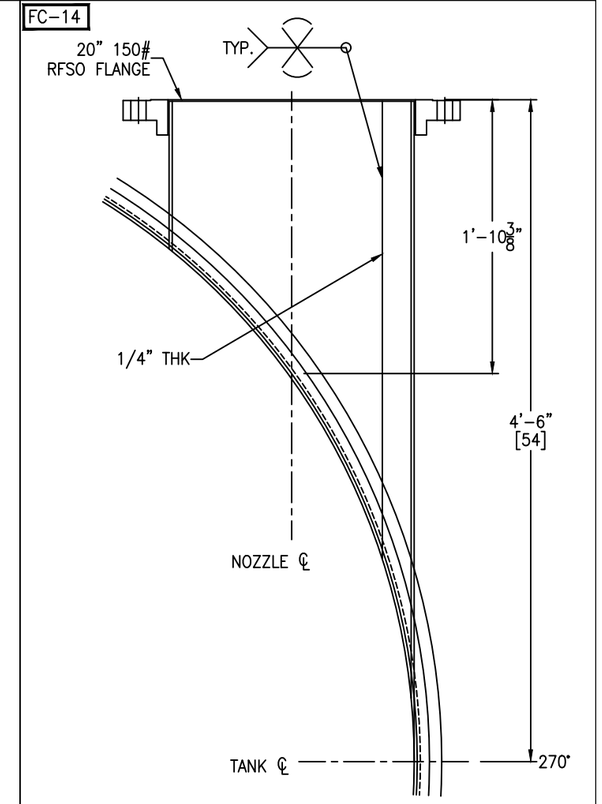

SEE SHT #1 FOR ORIENTATION

NOZZLE C DETAIL

SCALE: 1 1/2" = 1'-0"

FC-14

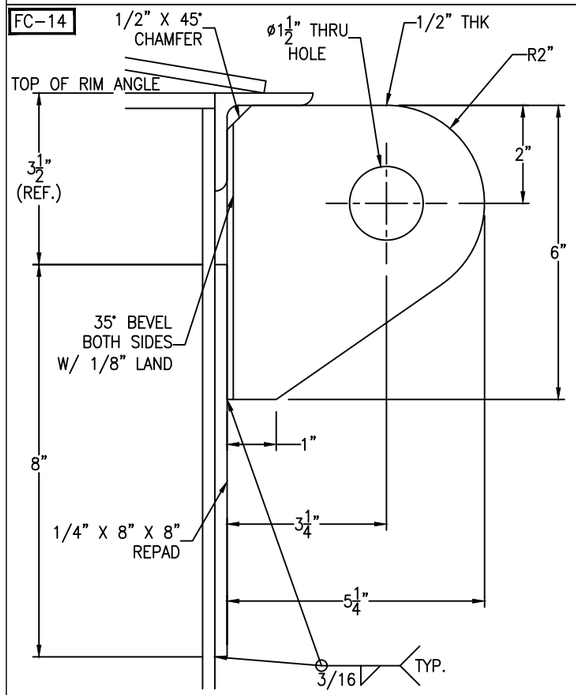

TANK WT. <= 10000#
SHACKLE PIN DIA. = 1"

LIFT LUG DETAIL

(2 REQ'D) SCALE: 6" = 1'-0"

FC-14

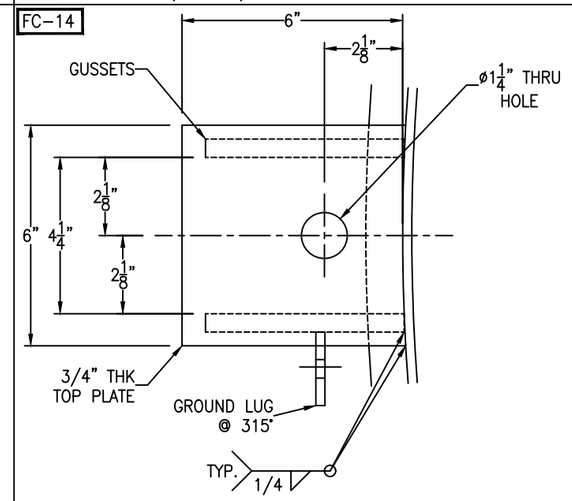

ANCHOR LUGS ARE LOCATED
@ 22.5°, 135°, 225°, & 337.5°

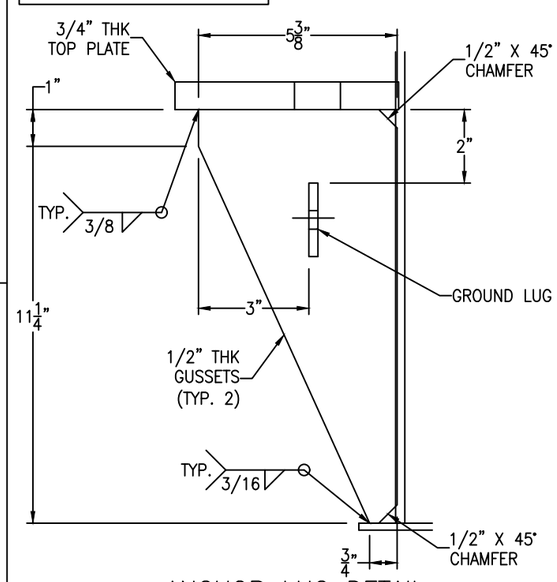

ANCHOR LUG DETAIL

(4 REQ'D) SCALE: 4 1/2" = 1'-0"

FC-14

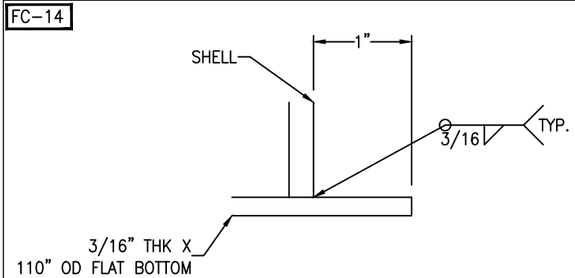

FLAT BOTTOM DETAIL

SCALE: 1'-0" = 1'-0"

FC-14

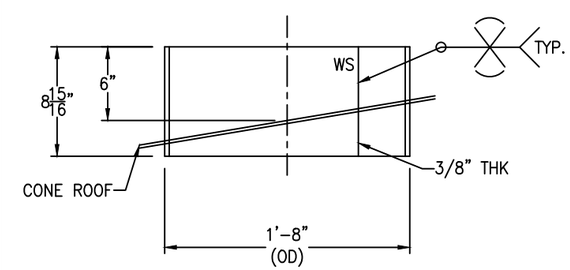

NOZZLE G & H WELD DETAIL

SCALE: 1 1/2" = 1'-0"

FC-14

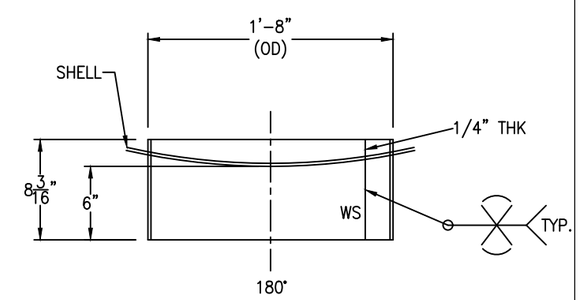

NOZZLE F WELD DETAIL

SCALE: 1 1/2" = 1'-0"

REV	D.BY	C.BY	DATE	DESCRIPTION
2				AS BUILT
1	RS	–	3/13/26	CERTIFIED
0	AD	HP	2/26/26	APPROVAL

⚠ REVISIONS

Savannah Tank & Equipment Corp.
1517 Telfair Road, Savannah, GA 31415
(912) 233-8902

DRAWN BY: AD
CHK'D BY: HP
APPROVED BY: NP
SCALE: 3/8" = 1'-0"

US SUGAR CORPORATION
PRIMARY SCREENED JUICE TANK C
⚠1 EQUIP. #RJH TNK 100239
CUST. PO #4500440583

DRAWING NO.: 021-26-2 SHT 2 OF 5 REV. SET 1

FC-14

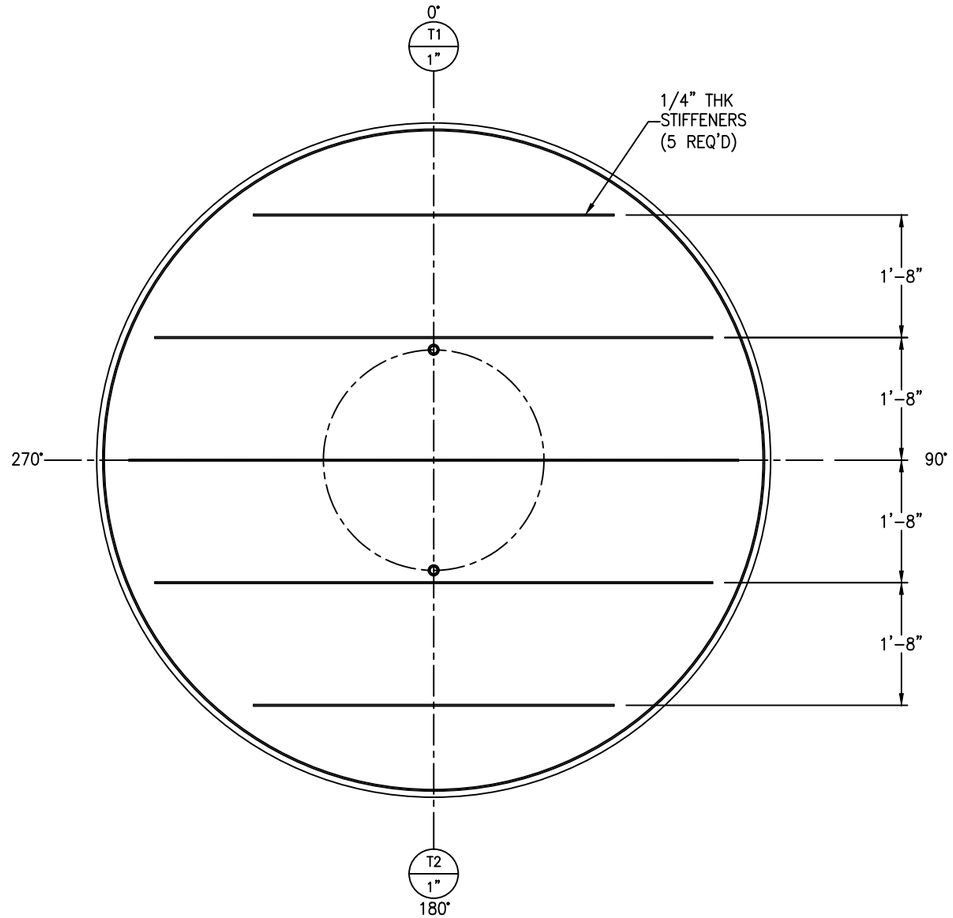

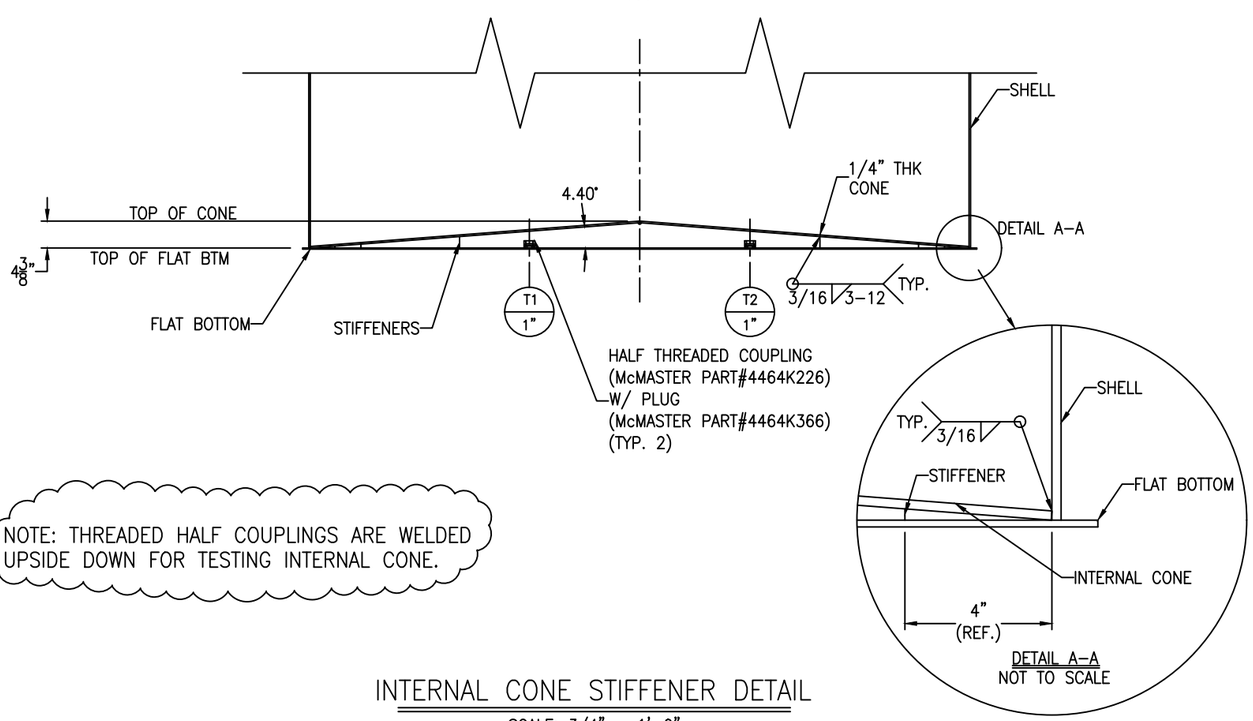

NOTE: THREADED HALF COUPLINGS ARE WELDED UPSIDE DOWN FOR TESTING INTERNAL CONE.

INTERNAL CONE STIFFENER DETAIL

SCALE: 3/4" = 1'-0"

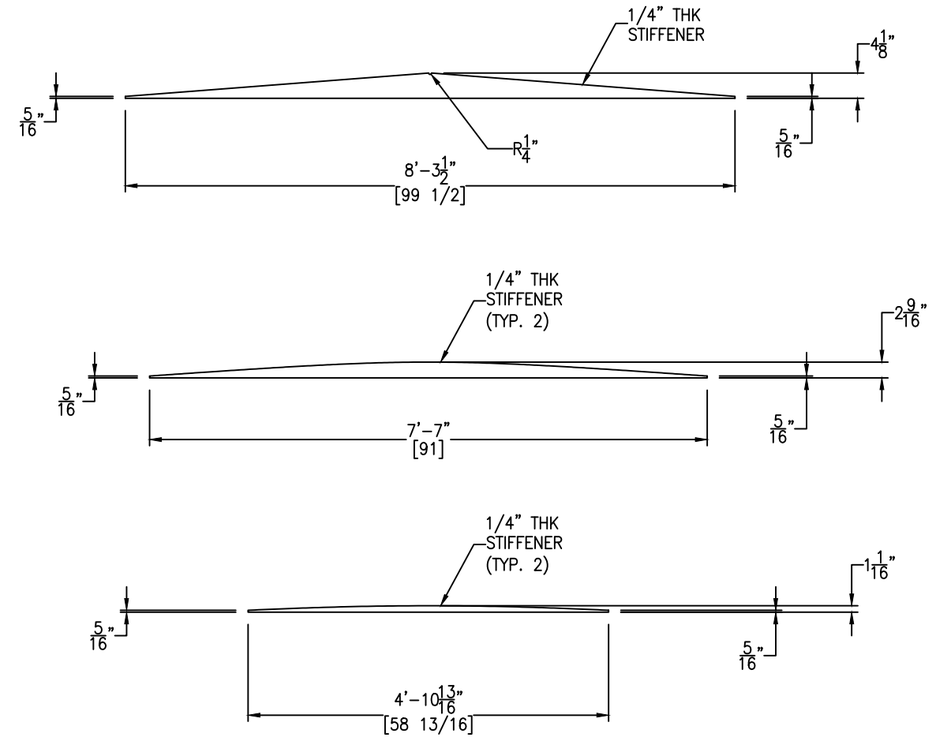

STIFFENER DETAIL

SCALE: 3/4" = 1'-0"

FC-14

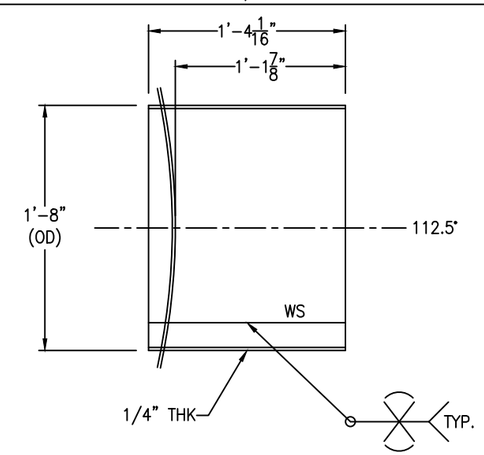

NOZZLE E WELD DETAIL

SCALE: 3/4" = 1'-0"

REV	D.BY	C.BY	DATE	DESCRIPTION
2				AS BUILT
1	RS	–	3/13/26	CERTIFIED
0	AD	HP	2/26/26	APPROVAL

⚠ REVISIONS

Savannah Tank & Equipment Corp.
1517 Telfair Road, Savannah, GA 31415
(912) 233-8902

DRAWN BY: AD
CHK'D BY: HP
APPROVED BY: NP
SCALE: 3/8" = 1'-0"

US SUGAR CORPORATION
PRIMARY SCREENED JUICE TANK C
⚠1 EQUIP. #RJH TNK 100239
CUST. PO #4500440583

DRAWING NO.: 021-26-3 SHT 3 OF 5 REV. SET 1

FC-14

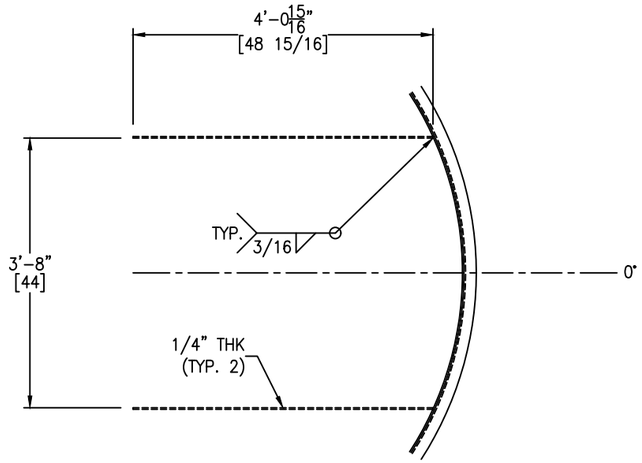

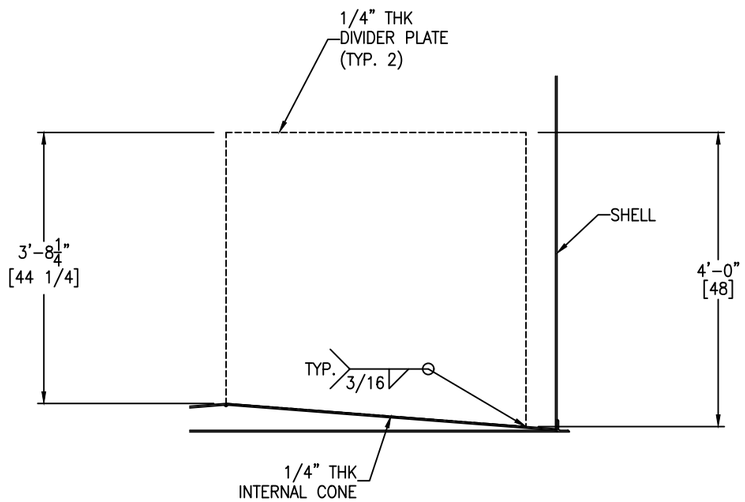

DIVIDER PLATE DETAIL

SCALE: 3/4" = 1'-0"

FC-14

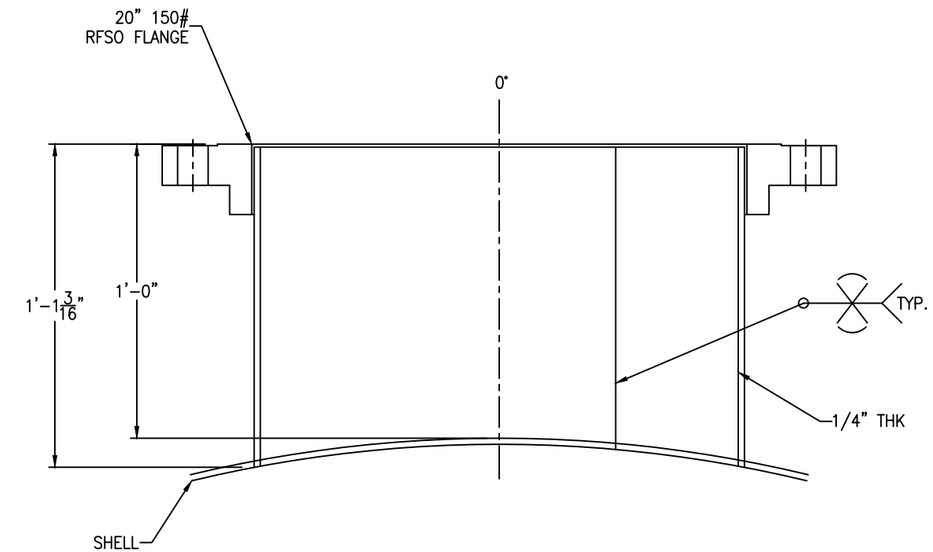

NOZZLE B WELD DETAIL

SCALE: 3" = 1'-0"

REV	D.BY	C.BY	DATE	DESCRIPTION
2				AS BUILT
1	RS	–	3/13/26	CERTIFIED
0	AD	HP	2/26/26	APPROVAL

REVISIONS

Savannah Tank & Equipment Corp.
1517 Telfair Road, Savannah, GA 31415
(912) 233-8902

DRAWN BY: AD
CHK'D BY: HP
APPROVED BY: NP
SCALE: 3/8" = 1'-0"

US SUGAR CORPORATION
PRIMARY SCREENED JUICE TANK C
1 EQUIP. #RJH TNK 100239
CUST. PO #4500440583

DRAWING NO.: 021-26-4 SHT 4 OF 5 REV. SET 1

FC-14

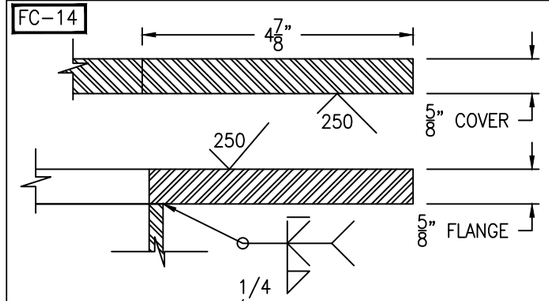

FLANGE/COVER DETAIL

(1 REQ'D) SCALE: 6" = 1'-0"

FC-14

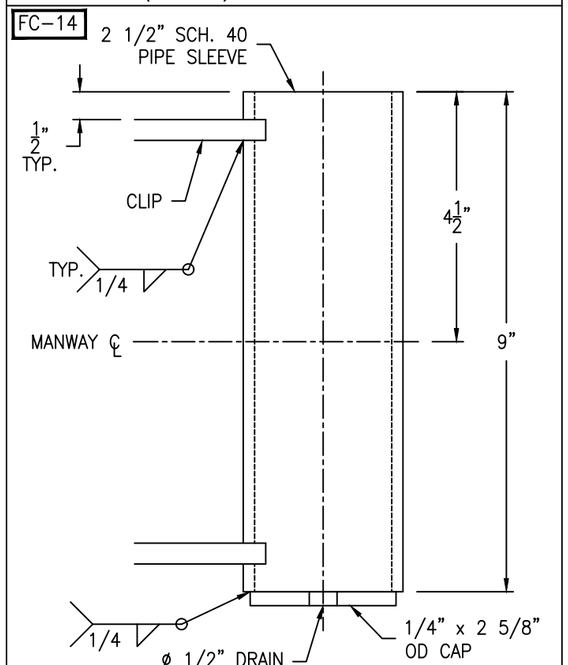

SLEEVE DETAIL (SS304)

(1 REQ'D) SCALE: 6" = 1'-0"

FC-14

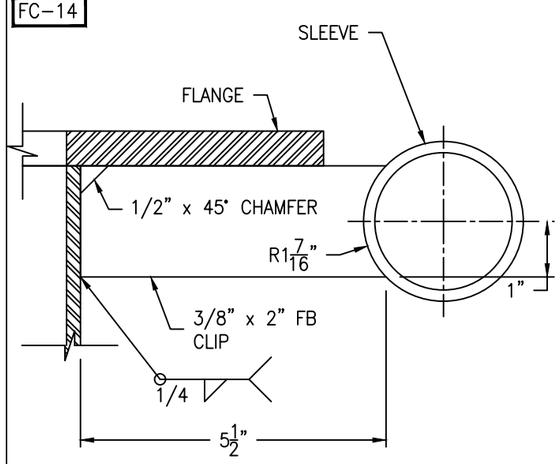

CLIP DETAIL (SS304)

(2 REQ'D) SCALE: 6" = 1'-0"

FC-14

Bolting for blind
(42) 3/4-10 NC x 2 1/2" HH BOLT
(42) 3/4-10 NC HH NUT
(1) 35 3/8" OD x 30" ID x 1/8" GASKET

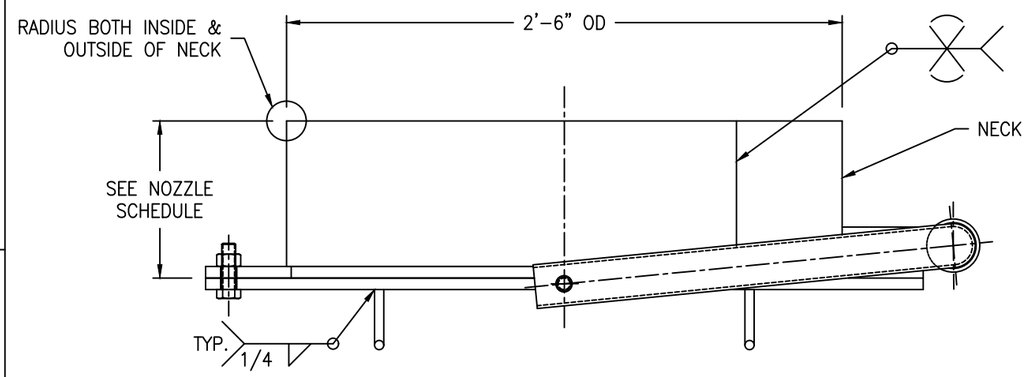

SEE SHEET #1 FOR DAVIT ORIENTATION

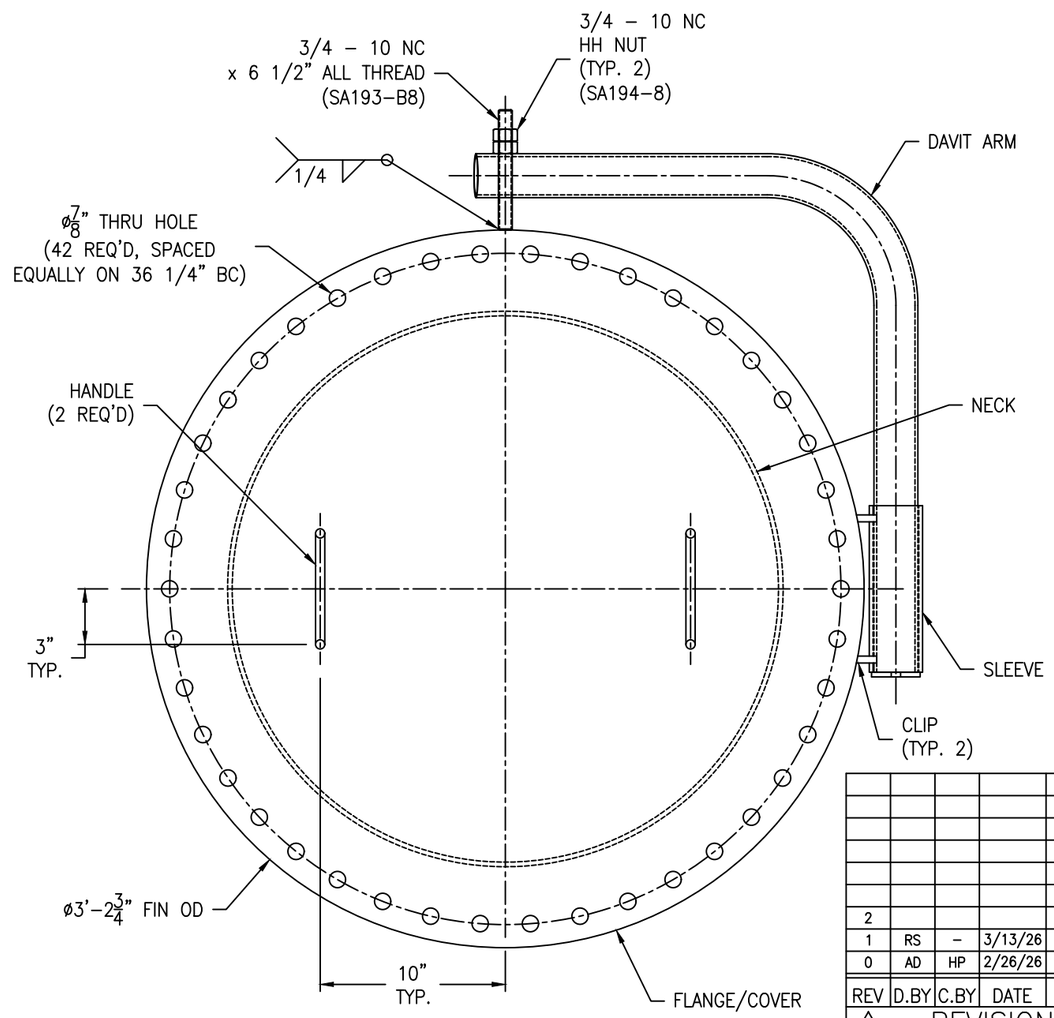

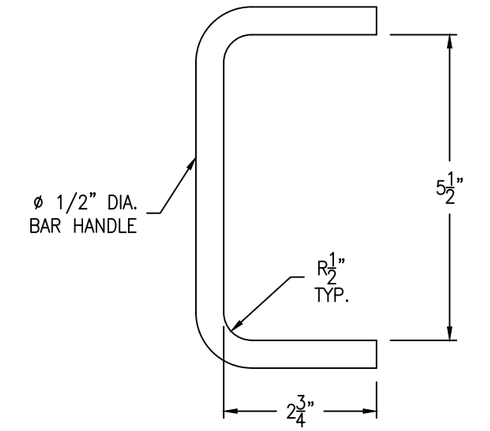

HANDLE DETAIL (SS304)

(2 REQ'D) SCALE: 6" = 1'-0"

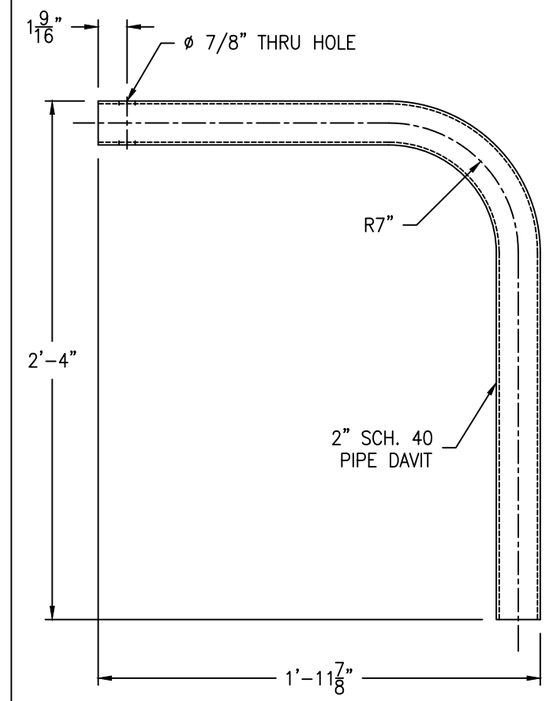

DAVIT ARM DETAIL (SS304)

(1 REQ'D) SCALE: 2" = 1'-0"

REV	D.BY	C.BY	DATE	DESCRIPTION
2				AS BUILT
1	RS	–	3/13/26	CERTIFIED
0	AD	HP	2/26/26	APPROVAL

1 REVISIONS

Savannah Tank & Equipment Corp.
1517 Telfair Road, Savannah, GA 31415
(912) 233-8902

DRAWN BY: AD
CHK'D BY: HP
APPROVED BY: NP
SCALE: 3/8" = 1'-0"

US SUGAR CORPORATION
PRIMARY SCREENED JUICE TANK C
1 EQUIP. #RJH TNK 100239
CUST. PO #4500440583

DRAWING NO.: 021-26-5 SHT 5 OF 5 REV. SET 1